PIR SENSOR

Wireless SMART motion sensor

The AURATON PIR Sensor motion detector is a practical solution that increases comfort, safety, and energy efficiency in a building. Thanks to easy installation and battery power, the device can be quickly mounted anywhere - without wiring.

The sensor detects motion and automatically triggers programmed actions in the SUPLA system. It can switch on lighting when entering a room, activate the DHW (domestic hot water) circulation pump to reduce energy losses, and respond to unwanted movement - e.g., in case of an intruder. The built-in temperature sensor can be used to measure temperature in the room.

Additionally, the sensor can send push notifications to a phone - for example, when a child wakes up at night or when something unexpected happens at home. Integration with other AURATON Smart devices enables the creation of advanced automation scenarios tailored to the user's daily needs.

- Maintenance-free control of the DHW (domestic hot water) circulation pump using a motion sensor
- Temperature sensor
- Triggering actions of other AURATON Smart devices via the motion detection
- Designed to work with AURATON Box and SUPLA
- Battery-powered

TECHNICAL DATA

Power supply	CR123A 3V lithium battery (included), replaceable battery
Operating temperature range	0°C – 40°C
Operating cycle	daily
Radio frequency	868,850 MHz 869,000 MHz
Radio signal power	up to 11 dBm
Operating range	in a typical building with standard wall construction – approx. 30 m in open space – up to 300 m
Operating status indication	LED
Protection rating	IP20
Humidity	≤85% non-condensing

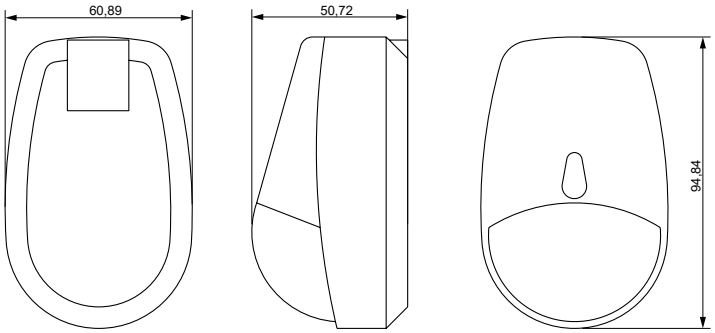

Producer:
LARS, ul. Świerkowa 14, 64-320 Niepruszewo
tel. +48 61 840 40 40, e-mail: trade@auraton.pl
www.auraton.pl

MADE IN EU
RoHS compliant
Nature Friendly Company
THE GLOBAL GOALS
POLSKI PRODUCENT